PK

RODLESS RECTILINEAR DISPLACEMENT TRANSDUCER

Main features

- *The transducer has been improved in order to guarantee greater reliability under all conditions*
- *Mechanical linkage using joint with take up of play, M5 thread*
- *Installation is made simpler by the absence of electrical signal variation in output, outside the Theoretical Electrical Stroke*
- *The new grooves provide an excellent alternative to the usual system of fastening with brackets*
- *Ideal for applications on plastic injection presses, vertical presses, and on many other processing machines*
- *Grade of protection IP40*

TECHNICAL DATA

Useful electrical stroke (C.E.U.)	100/130/150/175/200/225/250/300/ 350/360/400/450/500/600/700/750/ 850/900/1000/1250/15001750/2000
Independent linearity (within C.E.U.)	± 0,05%
Resolution	infinite
Repeatibility	0.01 mm
Electrical connection	PK M - DIN43650 4-pin connector PK B - DIN43322 5-pin connector
Protection	IP40
Displacement speed	≤ 10m/s
Displacement force	≤ 1.2 N
Vibrations	5...2000Hz, Amax =0,75 mm amax. = 20 g
Shock	50 g, 11ms.
Acceleration operative	200 m/s^2 max (20g)
Tolerance on resistance	± 20%
Recommended cursor current	< 0,1 μA
Maximum cursor current	10mA
Maximum applicable voltage	60V
Electrical isolation	>100MΩ at 500V=, 1bar, 2s
Dielectric strength	< 100 μA at 500V~, 50Hz, 2s, 1bar
Dissipation at 40°C (0W at 120°C)	3W
Temperature Coefficient of the resistance	-200 …. +200 ppm/°C typic
Actual Temperature Coefficient of the output voltage	≤ 5ppm/°C typic
Working Temperature	-30...+100°C
Storage Temperature	-50...+120°C
Case material	Anodised aluminium Nylon 66 G 25
Mounting method	Brackets with variable longitudinal axis with M6 screw ISO4017-DIN933

MECHANICAL DIMENSIONS

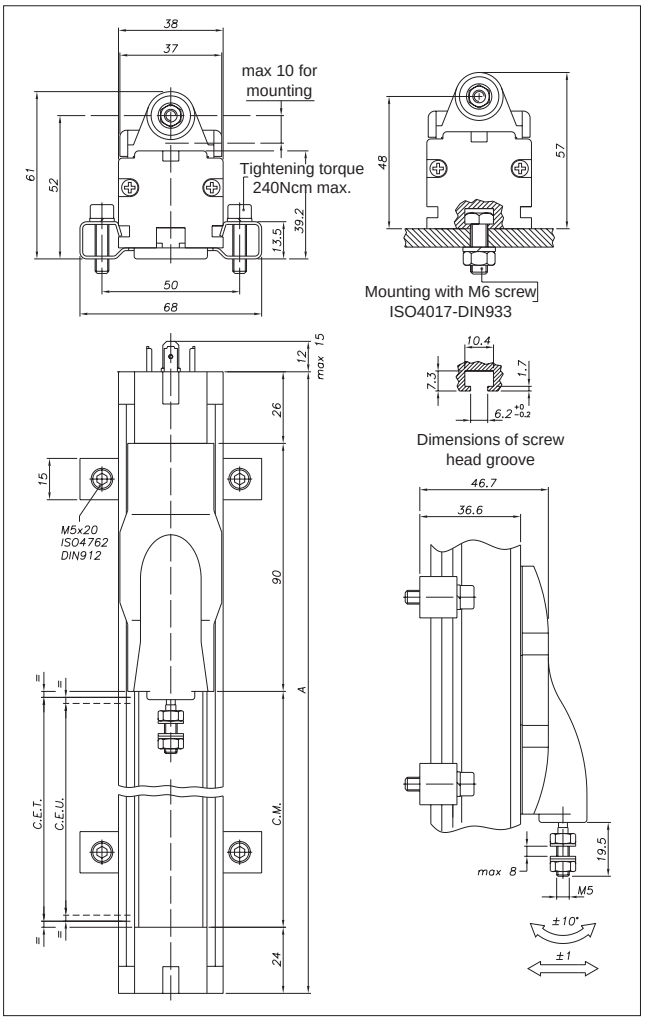

Important: all the data reported in the catalogue linearity, lifetime, temperature coefficient are valid for a sensor utilization as a ratiometric device with a max current across the cursor Ic ≤ 0.1 μA.

MECHANICAL / ELECTRICAL DATA

MODEL		100	130	150	175	200	225	250	300	350	360	400	450	500	600	700	750	850	900	1000	1250	1500	1750	2000
Useful electrical stroke (C.E.U.) + 3 / -0	mm	100	130	150	175	200	225	250	300	350	360	400	450	500	600	700	750	850	900	1000	1250	1500	1760	2000
Theoretical electrical stroke (C.E.T.) ± 1	mm	103	133	153	178	204	229	254	305	355	365	406	458	509	611	713	763	865	915	1017	1271	1521	1771	2021
Resistance (C.E.T.)	kΩ	5								10											20			
Mechanical stroke (C.M.)	mm	113	143	163	188	214	239	264	315	365	375	416	468	519	621	723	773	875	925	1027	1281	1531	1781	2031
Case length (A)	mm	253	283	303	328	354	379	404	455	505	515	556	608	659	761	863	913	1015	1065	1167	1421	1671	1921	2171

ELECTRICAL CONNECTIONS

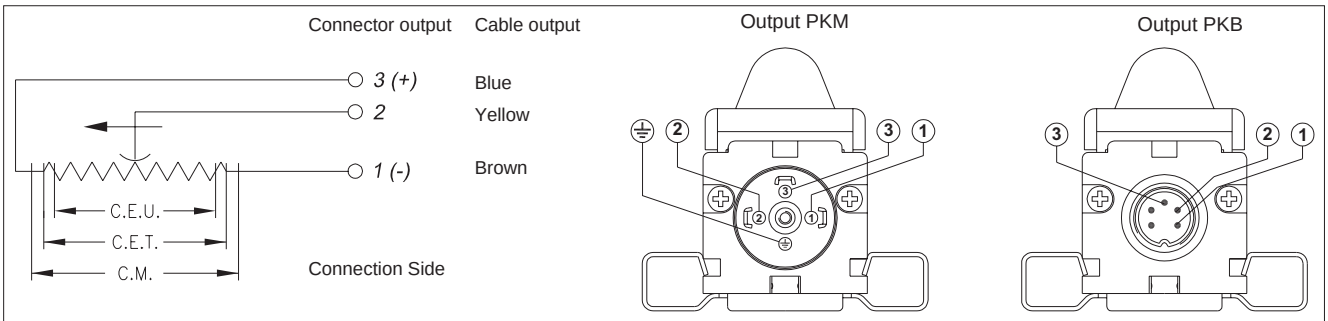

INSTALLATION INSTRUCTIONS

- Respect the indicated electrical connections (DO NOT use the transducer as a variable resistance)
- When calibrating the transducer, be careful to set the stroke so that the output does not drop below 1% or rise beyond 99% of the supply voltage.

ORDER CODE

Displacement transducer **PK** ☐ ☐ ☐ ☐ ☐ ☐ 0 0 0 X 0 0 0 X 0 ☐

4-pole connector output DIN43650-ISO4400	**M**
5-pole connector output DIN43322	**B**

Model

No certificate attached	**0**
Linearity curve to be attached	**L**

Color of plastic heads (green)	**0**
Color of plastic heads (black)	**N**

Example:**PK - M - 0300 000X000X00**
PK displacement transducer, 4-pole connector output DIN43650 - ISO 4400, cuseful electrical stroke (C.E.U.) 300mm., no certificate attached; green plastic components

ACCESSORIES (standard)

Fixing kit for PK from 100 to 900: 2 brackets, screws, grower	**PKIT 059**
Fixing kit for PK from 1000 to 2000: 3 brackets, screws, grower	**PKIT 061**

ACCESSORIES (optional)

PKM 4-pole 90° radial female connector DIN43650; IP65 PG9 clamp for ø 6-8 mm. cable	**CON006**
PKB 5-pole axial female connector DIN43322; IP40 clamp for ø 4-6 mm. cable	**CON011**
PKB 5-pole axial female connector DIN43322; IP65 PG7 clamp for ø 4-6 mm. cable	**CON012**
PKB 5-pole 90° radial female connector DIN43322; IP40 clamp for ø 4-6 mm cable .	**CON013**

GEFRAN spa reserves the right to make any kind of design or functional modification at any moment without prior notice

Authorised Distributors :

AJAY SENSORS & INSTRUMENTS
No. 45/17, Gubbanna Industrial Garden, 12th 'A' Cross, 6th Block, Rajajinagar, Bangalore - 560 010.
Ph : 080 - 23304997. Fax : 080 - 23381040.
E-mail : ajaysensors@yahoo.com.